Anthony Fleet

STOCK MARKET

A complete simulation game for a TI59 but with sufficient detail for implementation on any system.

This is a game which simulates stockmarket activities, such as the buying and selling of shares in different companies, movement of prices, takeovers, bankruptcies, tax, bonuses, suspensions and market collapses. These events are randomly controlled by the calculator.

The object of the game (other than just survival) is to achieve the largest sum of money possible before the inevitable market collapse. A "gift" of £1000 is deposited in the bank at the start of the game, and it is by using this capital to make sound investments that profits will be accumulated. The original and, as yet, unrealised object of the game was to achieve £1 million deposited in the bank. The current record stands at £229,000 at stockmarket collapse.

The game itself has tremendous variety, and the two simple Buy and Sell commands potentially give the player complete control over the situation – if he uses them wisely!

The program and data memories are best recorded on two magnetic cards, making sure before programming that the partition is 639.39. A different game will be played on each occasion provided that either

(i) A different buying and selling scheme is followed
or (ii) Pressing 2nd E' a few times 'warms up' the random number generator.
or (iii) A different random number seed between 0 and 199017 is inserted into register 9.

Games can vary enormously in length due to the random nature of the ending, but an average time of playing works out at about 25 runs, and a good Bank Balance would be about £75,000.

The Background.

The Companies

The scenario is a mythical stockmarket in which investment is possible in four companies involved in mining. The companies themselves adopt the names of the metals they mine. These are :

GOLD, TIN, ZINC, LEAD

Shares are brought in units and the price of these units may vary considerably not only from one metal to another, but in the metal itself. At the start of the game, each company's units are on sale at their average*+ price. See Table.

	"Floor" Value	"Average"	"Ceiling" Value
LEAD	1	10	20
ZINC	5	50	100
TIN	25	250	500
GOLD	125	1250	2500

*This is not precisely true.
+For further discussion of this see 'The Program'

The prices are controlled randomly (See Market News) but with an algorithm which is best described by

(i) If the company is highly priced in its range it has a high probability of dropping in value.
(ii) If a company is mid-priced in its range there is an equal probability of it dropping or rising.
(iii) If a company is low-priced in its range there is an equal probability of it rising in value.

All this means is that if a share is priced below its AVERAGE (which is also its Starting Value) it is best to buy, and if it is priced above, it is best to sell.+

These are obviously general rules and should not be followed verbatim, for the elements of risk taking in letting shares ride high, and suspense in waiting for shares to drop are the spices which add zest to the game.

The Bank

The player has an account into which, at the start of the game, £1,000 has been deposited. This account is credited when shares are sold, and bonuses are gained and debited when purchases are made and tax is due. All these transactions are effected automatically.

There is also a 'Bank' which is in effective control of the game, and which gives interest on money deposited, into which taxes are paid and from which money is paid out.

The interest rate is randomly controlled by the same kind of algorithm as the share prices, and the interest rate varies from

1 – 39%

although this rate is far more stable than the prices.

It is possible to make changes to the program to alter these algorithms and thus change the nature of the game. See 'Variations'.

Details Of The Game

There are three basic commands in use during the course of the game.

A – This leads directly to the next round which consists of
(i) Market News
(ii) Newsflash (possibly)
(iii) Current Holding

B – Buy
C – Sell

There are also three other minor commands which may be used if necessary

2nd E' – This can be used at the start of the game for 'warming up' the randomiser.
SBRSBR – This can be used at any time when the calculator has stopped for finding out the current Bank Balance.
SBR594 – This can be used to terminate the game, and to reset registers for starting a new game.

Here follows an in-depth study of the various sections.

(i) Market News

The Companies

This is the main vehicle of Stockmarket Events. Each of the companies are printed in turn.

LEAD
ZINC Followed by the events
TIN which have overtaken them.
GOLD

These events are listed as follows :

(i) HOLD
The price of the share remains unchanged.
(ii) X UP
The price of shares increases by X
(iii) X DOWN
The price of shares decreases by X
[In the above three cases the new price is printed beneath the message]
Or – there may be a newsflash, followed by
(iv) SUSPENDED
The player may not buy or sell in that company in the current round.

(v) BANKRUPT
All shares held by the player in that company are forfeited, and the company is reset to its starting value.
(vi) TAKEOVER; SELL AT X
All shares held by the player in that company are automatically sold for the price shown.
(vii) TAKEOVER SUSPENDED
Player has escaped takeover at last minute – no shares sold.
[In cases (iv) – (vii) above no share price is printed as no dealings can be made in that company in the current round. If this is tried a message will be printed – "SUSPENDED"]
In cases (v) and (vi) above the shares are reset to their starting value after TAKEOVER and BANKRUPTCY.

The Bank
The Bank news may be
(i) X %
The player will be credited with X% of his current bank account.
There may be a NEWSFLASH here
(ii) SUSPENDED
No interest is printed, and the player receives none in his account.
(iii) FAILS
The Bank collapses and all money therein is lost!
When companies are bankrupt or taken over and the bank fails, they are envisaged as rising, phoenix-like to their former glory in order that as much variety of investment is maintained as possible.

(ii) NEWSFLASH
At moments during the game, the flow *may* be interrupted to go into a NEWSFLASH. There are three NEWSFLASH subroutines – one for companies, one for the bank (both used within the 'Market News' routine) and the third, the main one will be an event chosen at random from over fifty different possibilities.

All movements of money are effected automatically by the Subroutine.
The possible events are :
(i) Market SUSPENDED
The current market prices and Bank Rate is disregarded and a new Market News listing is printed.
(ii) SUPERTAX X% ($10 \leqslant X \leqslant 90$)
The Player's current Bank Balance is debited by X% of the total.
(iii) SUPERTAX SUSPENDED
No effect – A possible supertax cancelled at the last minute.
(iv) TAX BONUS X% ($10 \leqslant X \leqslant 90$)
The Player's Bank Balance is credited with X% of the current total.
(v) TAX BONUS SUSPENDED
No effect – A possible Tax Bonus cancelled at the last minute.
(vi) "Metal" – BONUS X% ($10 \leqslant X \leqslant 90$)
X% of the total value of the player's holdings in the named metal are calculated at Current Market value, and his account credited with this.
(vii) "Metal" – BONUS SUSPENDED
No effect – A possible Metal Bonus cancelled at the last minute.
(viii) "Metal" BONUS ISSUE
The player's current holding in the named metal is examined. He is then awarded one further share in the company for every two owned by him.
(ix) MARKET FAILS – BANK TAKEOVER
This sub-subroutine leads directly to the end of the game. All shares held by the player in each company are sold in turn as in a normal takeover the prices being printed at which each is sold at.

The final bank balance is printed with the message
'GAME ENDED'

N.B. The calculator may not go into this NEWSFLASH Routine at all, and may continue without pause to the next section.

(iii) CURRENT HOLDINGS
Under the title 'YOU HOLD' will be printed a listing of the player's present holdings in each of the companies and the amount in his account, updated to include money and share transactions made as a result of takeovers, taxes bonuses etc.

(iv) BUYING AND SELLING
These are the two *real* options open to the player. A buy or sell command is effected as follows.

ENTER a decimal as follows :	□ Number of Shares	•	□ Code of Company	THEN PRESS	Ⓑ = BUY or Ⓒ = SELL

e.g. 4 • 3 Ⓑ
means *Buy 4 ZINC*

The CODES are as follows :
1 ≡ GOLD
2 ≡ TIN
3 ≡ ZINC
4 ≡ LEAD

N.B. that these codes are in order of value and not in order of printout in 'Market News'.

After entering the instructions and pressing B or C one of several things may happen.
(i) The Calculator prints 'BUY' or 'SELL' followed by the number and metal specified. This means that the instructions have been accepted, understood and acted upon – and the player's bank account has been credited or debited as applicable.
(ii) One of the following messages is printed :
OVERDRAWN :
There are insufficient funds in the player's account to cover the intended purchase.
SUSPENDED
No dealings are allowed in that company in that particular round. (See Market News)
FRAUD
This may be printed for various reasons including :
An attempt to sell non-existent shares
An attempt to buy or sell negative amounts of shares
Entering an undefined code number
(iii) MARKET SUSPENDED
The calculator may suspend dealings in the current market. This will be done *before* buying or selling, and any instructions entered prior to this will be disregarded.
(iv) NEWSFLASH
The calculator goes into the Newsflash Subroutine. This will happen *after* the buying or selling has occurred!

Any number of buyings or sellings may be made if a mistake has been made e.g. 4 gold shares bought by accident, then this may be corrected by selling 4 gold shares.

If after Buying or Selling the Player wishes to inspect his current holdings in the bank he may do so by pressing
SBR SBR

Variations

Different games may be played by

1. Inserting different amounts of money in the Bank (register 10) before the start of the game.
2. Inserting a different digit at program step 158. This has the effect of expanding or reducing the scale of price increases and reductions on share values. At present the digit is 4. This gives a '20'-point scale. Other digits give

		approx point scale	
1	—	100	Prices subject to upward drift
2	—	50	More sluggish
3	—	30	
4	—	20	
5	—	18	Prices subject to downward drift
6	—	15	More variable
7	—	13	
8	—	11	
9	—	10	

The effects of this change mean that the 'Average' price of the shares changes, and the effects in the table come into being.

3. Inserting 2nd Nop CLR into program positions 303, 304 mean that on takeover and bankruptcies, shareprices are reset to zero. When they next become available for sale, their prices will not be zero, but will be very low. This could add an interesting twist to the game.

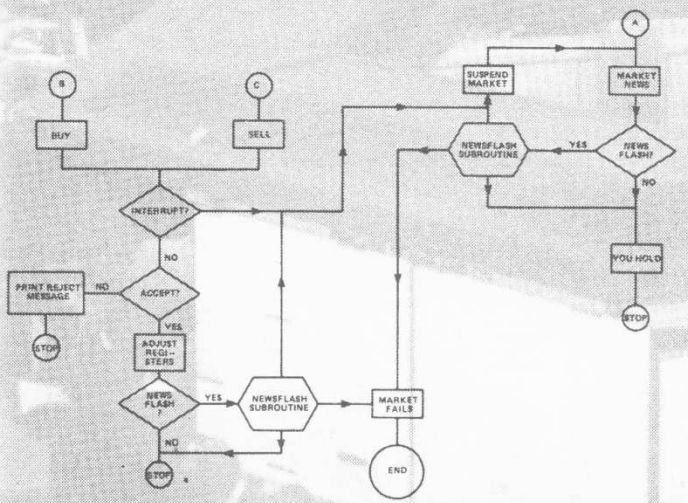

Simplified game flowchart

The Program

The program has a basically simple structure. (See Generalised Flowchart)

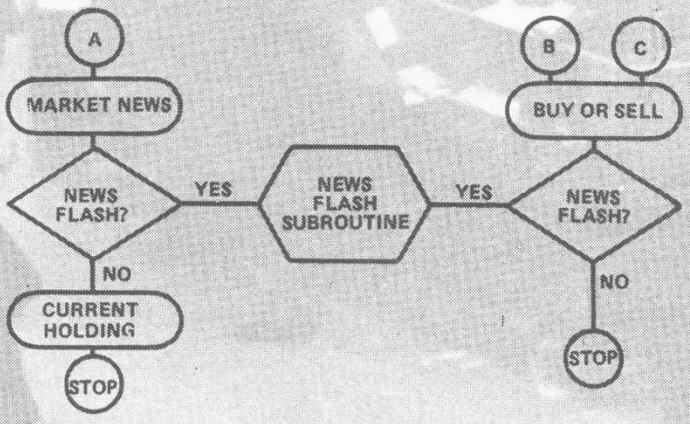

Decision routes

The Routines

1. Much use is made of the random number generator from Master Library 1, and a Subroutine and E' is used to convert this into a single digit 0–9. This is tested at various points in the program to provide branching conditions.
2. The variation in market prices is effected by the following method.

(i) The variation in market prices is effected by the following method :

CODE(N)

1	GOLD	— Register 1	—	contents:—	X1 . Y1
2	TIN	— Register 2	—	contents:—	X2 . Y2
3	ZINC	— Register 3	—	contents:—	X3 . Y3
4	LEAD	— Register 4	—	contents:—	X4 . Y4

The contents of the registers are two-part information codes.

Xi is the amount of shares held by the player.

Yi (two decimal places) is the amount of units up a 20 point scale, the current market value of the company has risen. The current value of the shares is calculated by

$$Yi \times 5^{(4-n)}$$

e.g. for Y2 = 15, the price of tin works out as

$$15 \times 5^{(4-2)} = 375$$

(ii) The price changes by use of the algorithm

$$\text{Price Change} = \left[\frac{\text{Random digit} - 0.4\ Yi}{(1-9)}\right]_{\text{INTEGER PART}}$$

and all possible price changes are given by

[SHARE VALUE CODE]

[RANDOM NUMBER]	1	2	3	4	5	6	7	8	9	10	11	12	13	14	15	16	17	18	19	20	21
1	0	0	0	0	–1	–1	–1	–2	–2	–3	–3	–3	–4	–4	–5	–5	–5	–6	–6	–7	–7
2	+1	+1	0	0	0	0	–1	–1	–2	–2	–2	–3	–3	–4	–4	–4	–5	–5	–6	–6	
3	+2	+2	+1	+1	+1	0	0	0	–1	–1	–1	–2	–2	–3	–3	–3	–4	–4	–5	–5	
4	+3	+3	+2	+2	+2	+1	+1	0	0	0	0	0	–1	–1	–2	–2	–2	–3	–3	–4	–4
5	+4	+4	+3	+3	+3	+2	+2	+1	+1	+1	0	0	0	0	–1	–1	–1	–2	–2	–3	–3
6	+5	+5	+4	+4	+4	+3	+3	+2	+2	+2	+1	+1	0	0	0	0	0	–1	–1	–2	–2
7	+6	+6	+5	+5	+5	+4	+4	+3	+3	+3	+2	+2	+1	+1	+1	0	0	0	0	–1	–1
8	+7	+7	+6	+6	+6	+5	+5	+4	+4	+4	+3	+3	+2	+2	+2	+1	+1	0	0	0	0
9	+8	+8	+7	+7	+7	+6	+6	+5	+5	+5	+4	+4	+4	+3	+3	+3	+2	+2	+1	+1	0

REAL MINIMUM VALUE — REAL 'AVERAGE' — REAL MAXIMUM VALUE

Share value table

it can be seen from this table that the 'actual' average price is 12 units up (and not 10 as stated earlier)

i.e. The Mid-Prices are : LEAD — 12
ZINC — 60
TIN — 300
GOLD — 1500

A similar algorithm controls the Bank.

The Registers

The contents of the Registers are as follows :

0	USED	
1	GOLD	Coded Information
2	TIN	
3	ZINC	
4	LEAD	
5	USED	
6	USED	
7	USED	
8	PRINT CODE	Locations 12 to 39 CONTAIN PRINT CODES
9	RANDOM NUMBER SEED	
10	BANK ACCOUNT	
11	BANK RATE	

User Instructions

1. Making sure that Master Library 1 is in position and the calculator connected to the printer, reset the partition to 639.39. By command 4 2nd Op 1 7. Enter program and data memories, either from cards (4 sides needed) or from keyboard.
2. To begin the game, press A.
3. Inspect Market News, Newsflash (if any) and Current Bank Balance. Compile coded purchase and enter it pressing B (see 'BUYING and SELLING')
4. When all purchases have been made press A again.
5. Repeat step 3 making sales and purchases as applicable until game is terminated or until £1 million made.

At any point SBRSBR may be pressed to gain knowledge of Bank account.

SAMPLE GAME

TO START THE FIRST AND EVERY ROUND, PRESS A.

PRINTOUT			COMMENTS
Ⓐ			
MARKET . . NEWS			
LEAD			Lead maintain starting value
HOLD			
	10.		
ZINC			
	25.	UP	Zinc increase from 50 to 75
	75.		
TIN			
HOLD			Tin maintain starting value
	250.		
GOLD			
	375.	DOWN	Gold decrease from 1250
	875.		to 875
BANK			
	20.	%	Bank rate
YOU HOLD			
	0.	LEAD	
	0.	ZINC	
	0.	TIN	
	0.	GOLD	
	1200.00	BANK	Bank = £1000 at 20% = £200 extra

4.2			
Ⓑ			
BUY	4.	TIN	4 TIN units bought at £250 each

SBR SBR			
	200.00	BANK	£200 left

Ⓐ			
MARKET . . NEWS			
LEAD	2.	UP	
	12.		
ZINC			No dealings in Zinc allowed
NEWSFLASH			
SUSPENDED			
TIN			
	50.	UP	Our investment in Tin is
	300.		paying off
GOLD			
	500.	UP	
	1375.		
BANK			
	22.	%	
NEWSFLASH			
TIN			Fortunate! This gives an extra
BONUS			£1080. i.e. 4 Tin shares at
	90.	%	£300 = £1200 90% of £1200 = £1080
YOU HOLD			
	0.	LEAD	
	0.	ZINC	
	4.	TIN	
	0.	GOLD	
	1561.60		

4.2			
Ⓒ			
SELL			
	4.	TIN	

Ⓐ			
MARKET . . NEWS			
LEAD			
	4.	UP	
	16.		
ZINC			Zinc almost reach ceiling
	15.	UP	
	90.		
TIN			
	50.	DOWN	
	250.		
GOLD			
	250.	DOWN	
	1125.		
BANK			
	19.	%	
NEWSFLASH			Calculator suspends market
MARKET . .			goes into new 'Market News'
SUSPENDED			
MARKET . . NEWS			
LEAD			
HOLD			
	16.		
ZINC			Zinc drop from their 'ceiling'
	20.	DOWN	
	70.		
TIN			
	25.	DOWN	
	225.		
GOLD			
	125.	DOWN	
	1000.		
BANK			
	19.	%	
NEWSFLASH			
TAX BONUS			Bonus of 50% of Account
	50.	%	
YOU HOLD			
	0.	LEAD	
	0.	ZINC	
	0.	TIN	
	0.	GOLD	
	4929.46	BANK	Current Bank level

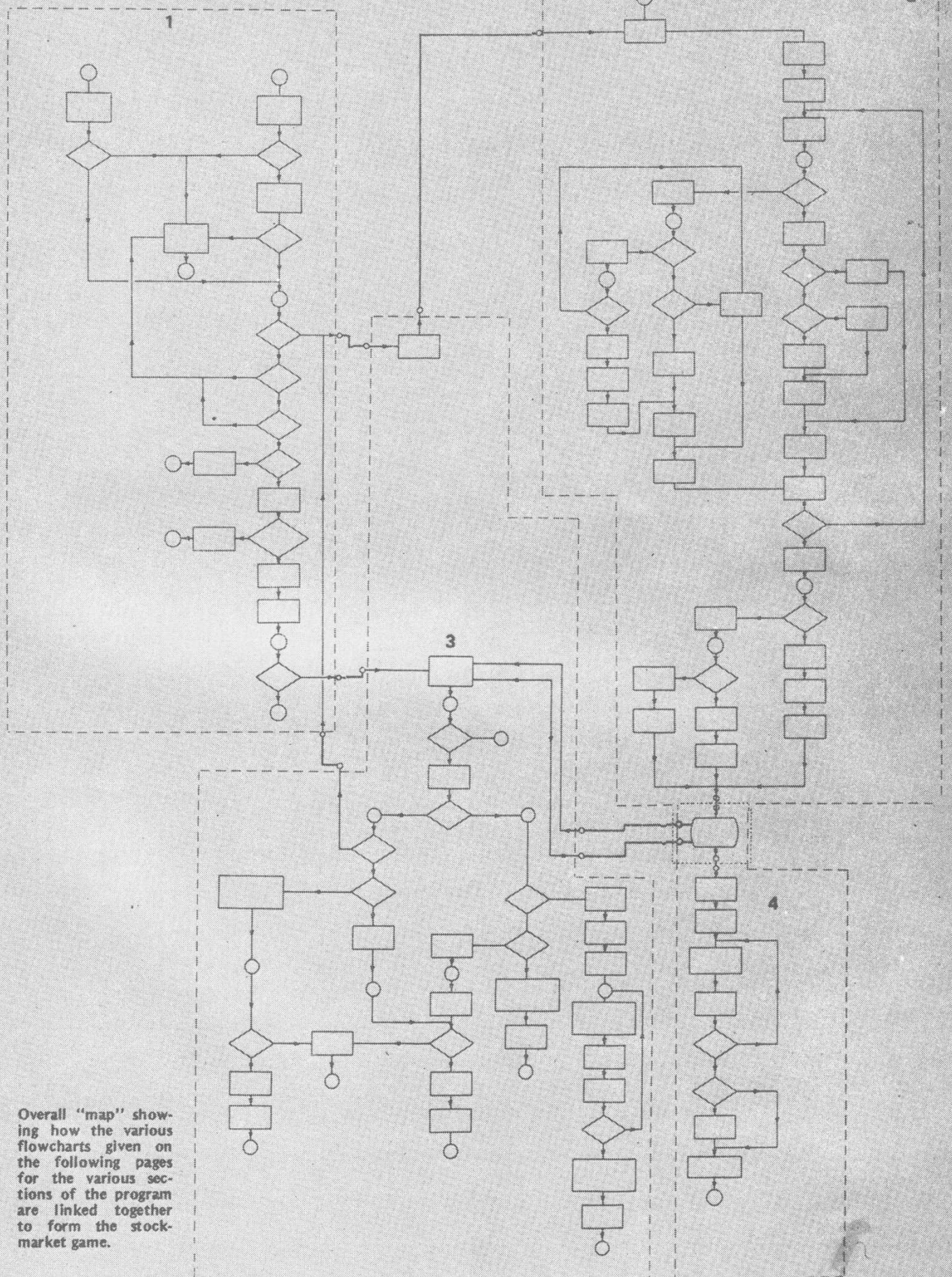

Overall "map" showing how the various flowcharts given on the following pages for the various sections of the program are linked together to form the stock-market game.

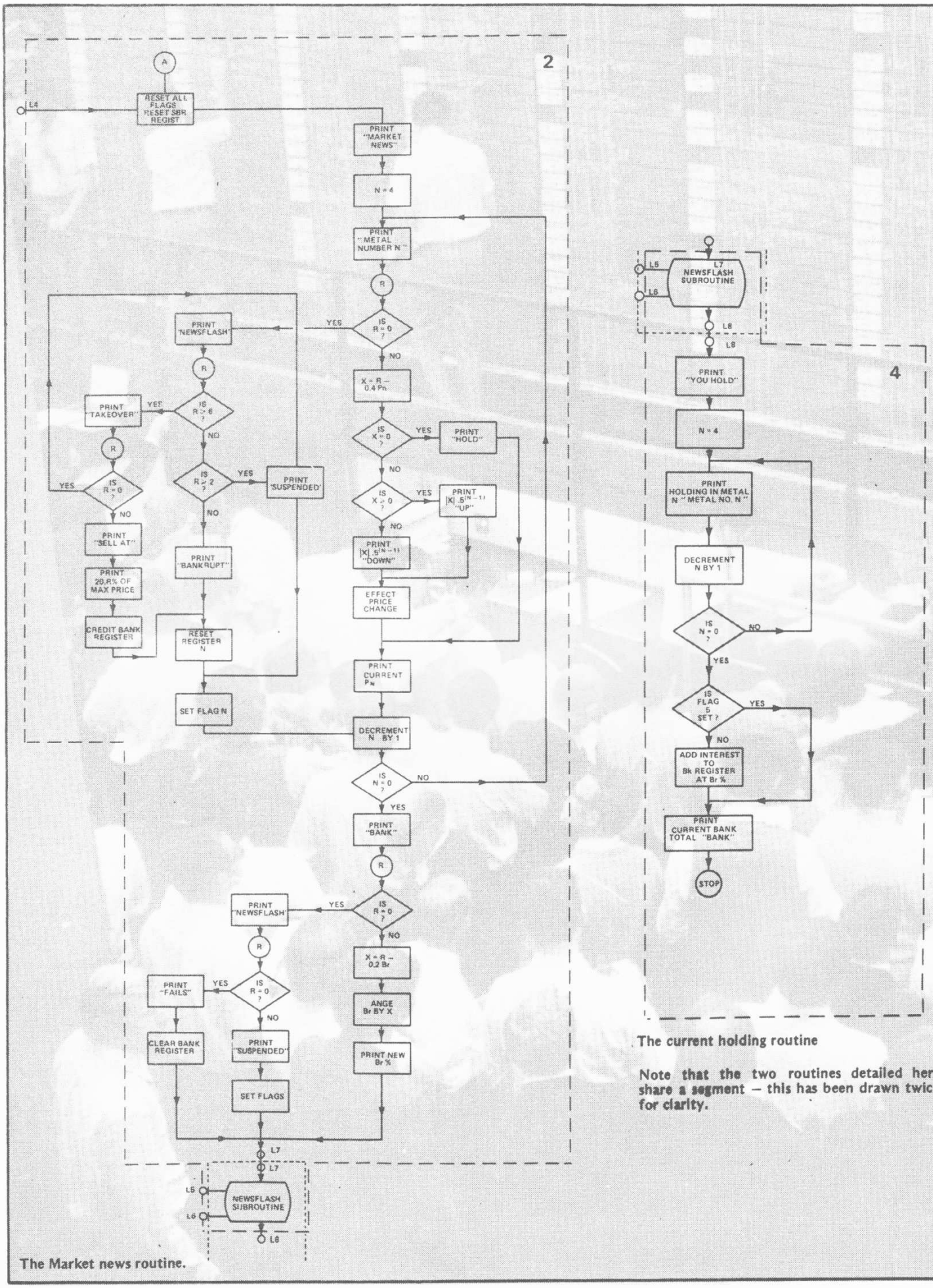

The Market news routine.

The current holding routine

Note that the two routines detailed here share a segment – this has been drawn twice for clarity.

2.1
Ⓑ
BUY
2. GOLD
NEWSFLASH — Newsflash after Buying
LEAD
BONUS
60. % — No lead shares owned

4.2
Ⓑ
BUY 4. TIN

Ⓐ
MARKET . . NEWS
LEAD
NEWSFLASH
SUSPENDED
ZINC
15. DOWN
55.
TIN
75. UP — Tin investment increases in value
300.
GOLD
HOLD
1000. — Gold maintains
BANK
19. %
NEWSFLASH
GOLD — We hold 2 gold shares. We obtain a further 1.
BONUS ISSUE
YOU HOLD
0. LEAD
0. ZINC
4. TIN
3. GOLD — 3 gold now held
2415.05 BANK

4.2
Ⓒ
SELL
4. TIN — Sold all tin shares

SBR SBR
3615.05 BANK

2.1
Ⓑ
BUY
2. GOLD — Buying into Gold

Ⓐ
MARKET . . NEWS
LEAD — No dealings in lead allowed
NEWSFLASH
SUSPENDED
ZINC
15. DOWN — Zinc now worth buying
40.
TIN
NEWSFLASH
TAKEOVER — Takeover – at very low price
SELL AT
50.
GOLD
HOLD
1000.
BANK
23. %
NEWSFLASH
ZINC
BONUS ISSUE
YOU HOLD
0. LEAD
0. ZINC
0. TIN
5. GOLD
1986.51 BANK

15.3
Ⓑ
BUY 15. ZINC

Ⓐ
MARKET . . NEWS
LEAD
4. DOWN
12.
ZINC
25. UP — Good profit made on Zinc
65.
TIN
100. UP
350.
GOLD
HOLD — Still no movement in Gold
1000.
BANK
26. %
YOU HOLD
0. LEAD
15. ZINC
0. TIN
5. GOLD
1747.01 BANK

15.3
Ⓒ
SELL 15. ZINC

SBR SBR
2722.01 BANK

1.1
Ⓑ
BUY
1. GOLD

Ⓐ
MARKET . . NEWS
LEAD
3. UP
15.
ZINC
NEWSFLASH
SUSPENDED
TIN

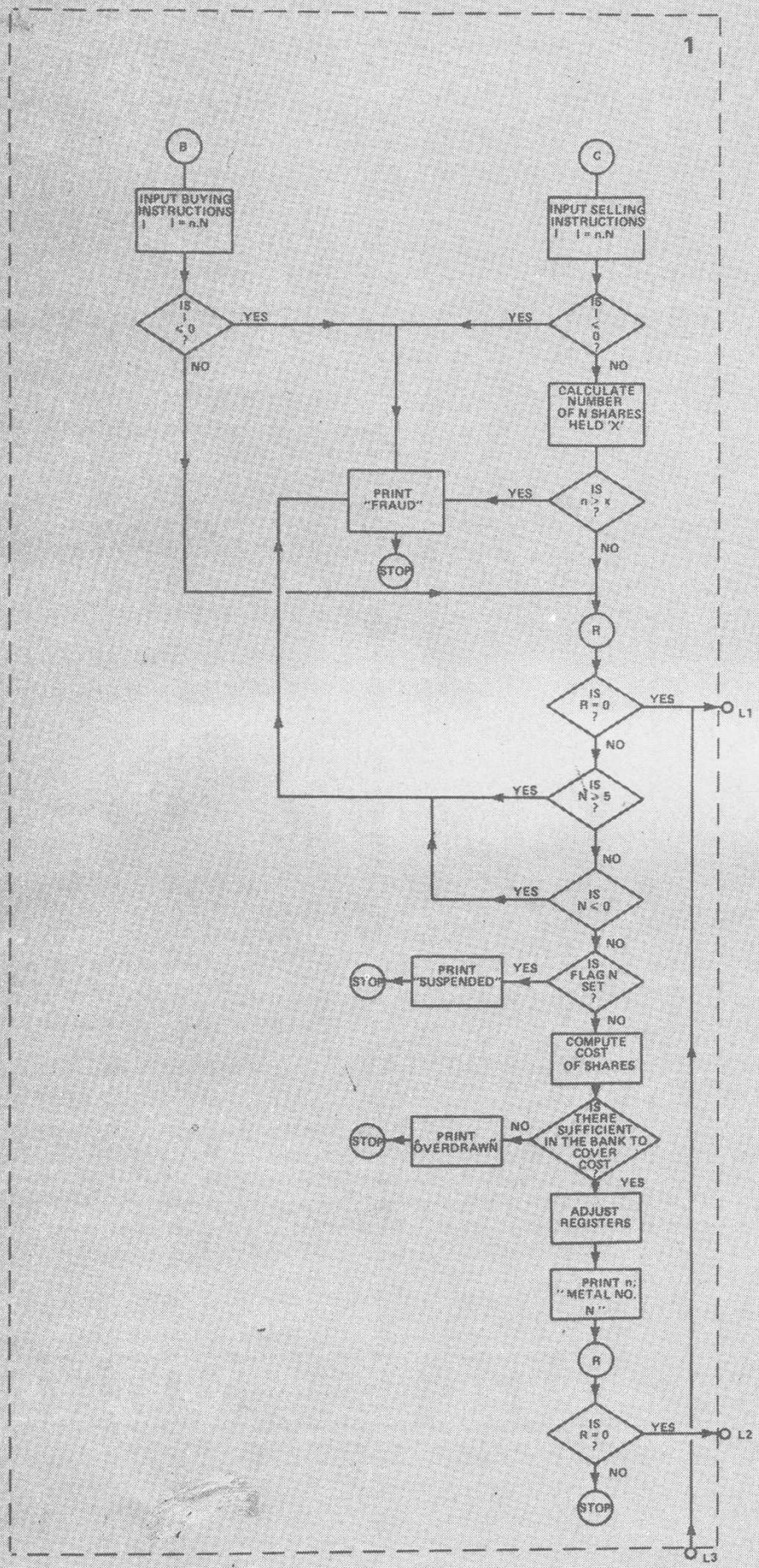

The Buy and Sell routines.

By now you will undoubtedly have noticed there is no listing given here for this program. If you own a TI–59 and would like a copy, an SAE to our Charing Cross Offices will bring you one Post Office Haste. For owners of other machines the flow charts herein should assist in getting the program converted. We'd be very interested to see a BASIC version of this simulation, so if you get it running – give us a shout!

The Newsflash routine.

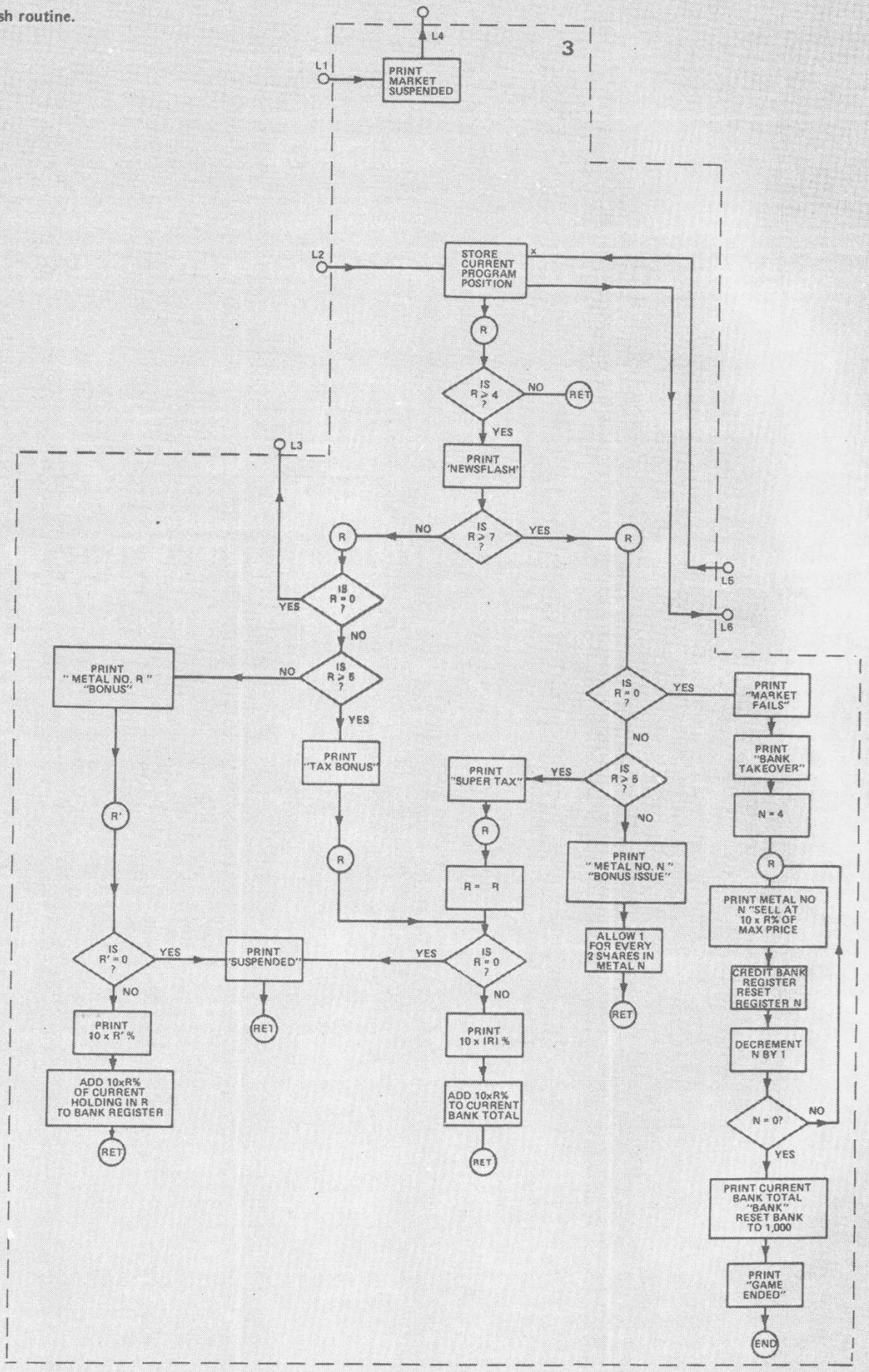

STOCK MARKET

HOLD
350.
GOLD
HOLD — Still no movement in Gold
1000.
BANK
26. %

YOU HOLD
0. LEAD
0. ZINC
0. TIN
6. GOLD
2169.73 BANK — Nothing to do

Ⓐ

MARKET . . NEWS
LEAD
2. DOWN
13.
ZINC
NEWSFLASH
TAKEOVER
SELL AT
70.
TIN
HOLD
350.
GOLD — After all that it goes down!
125. DOWN
875.
BANK
28. %
NEWSFLASH
TAX BONUS — Massive Tax Bonus!!
90. %

YOU HOLD
0. LEAD
0. ZINC
0. TIN
6. GOLD
5276.79 BANK

4.1
Ⓑ

BUY
4. GOLD — Buy while they're cheap

Ⓐ

MARKET . . NEWS
LEAD
1. DOWN
12.
ZINC
10. UP
60.
TIN
50. DOWN
300.
GOLD
750 UP — Massive increase.
1625. — Worth waiting for.

BANK
24. %
NEWSFLASH
SUPER TAX
40. %

YOU HOLD
0. LEAD
0. ZINC
0. TIN
10. GOLD
1321.93 BANK

10.1
Ⓒ

SELL
10. GOLD

SBR SBR

17571.93 BANK

Ⓐ

MARKET . . NEWS
LEAD
1. UP
13.
ZINC
NEWSFLASH
SUSPENDED
TIN
25. UP
325.
GOLD
125. UP — Should have waited!
1750.
BANK
25. %
Ending!
NEWSFLASH — Calculator selling off shares
MARKET . . FAILS
BANK
TAKEOVER
LEAD
SELL AT
18.
ZINC
SELL AT
10.
TIN
SELL AT
250.
GOLD
SELL AT
2250.

YOU HOLD
17571.93 BANK

GAME ENDED — END OF GAME

Total amount £17,571 . . . but game very short.